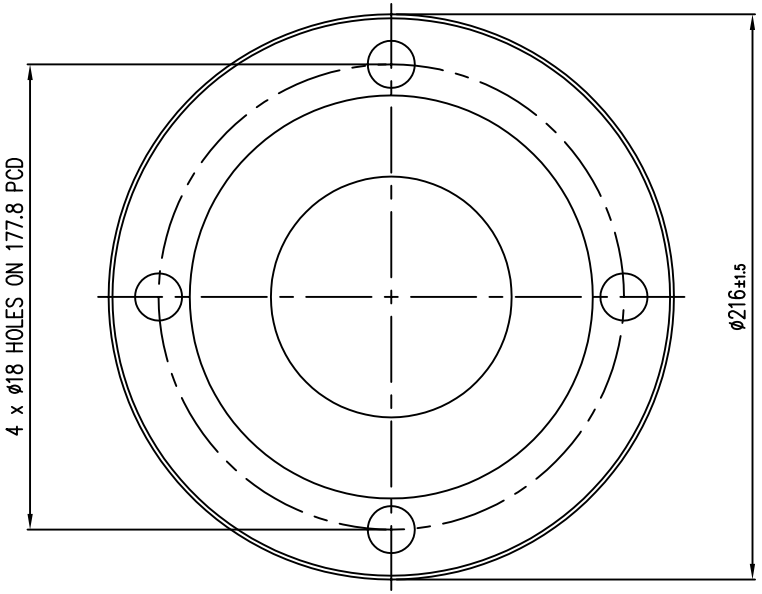

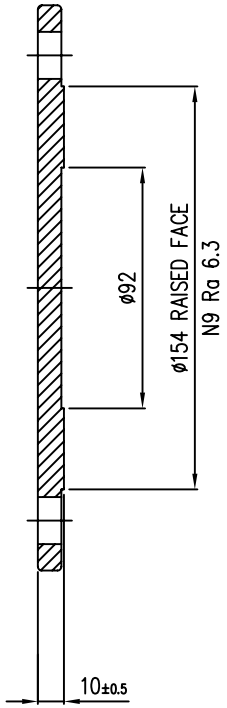

REV	DATE	AMENDMENT	BY WHOM	AUTHORISED BY
1	2	3	4	

SWIFT ENGINEERING (PTY) LTD.
Freddie Visser *E-mail: fredvis@swifteng.co.za*

MATERIAL	S/STL. 316L
SCALE	1:2
DRAWN	K.MOHUTSIWA
CHECKED	
DATE	14-12-2004

THIS DRAWING IS THE PROPERTY OF SWIFT ENGINEERING. IT MUST NOT BE COPIED OR DISCLOSED TO A THIRD PARTY WITHOUT THEIR WRITTEN CONSENT.

TITLE BLANK FLANGE BOTTOM DISCHARGE

DRG. No. STF7018 WEB

Rev